SINOLIFT
For material handling

BFW20 BFW25 BFW30

Hand Pallet Truck with Scale

ISO9001
CE

Easy Lift, Easy Life!

2000/2500/3000KG LOAD CAPACITY

The BFW series pallet jack with scale is a Hand Pallet Truck / Pallet Jack and Scale combination that allows you to weigh the cargo in transit. There is no need to move the load to a platform scale, as this multi-purpose mobile weighing truck allowing you to quickly verify incoming and outgoing freight.

Digital Scale & Printer

Digital scale and printer allows you to weigh your load on the spot for maximum efficiency. This pallet truck has an inbuilt weight measuring system that displays weight readings of the objects placed on it.

High Quality Cylinder

White cylinder: The one-piece oil pump has built-in inlet sealing ring to make the whole hydraulic system safe and sealed, and solve the problem of oil leakage of the pump body.

Warranty

3 years on pump jack or full pump jack replacement, 12 months on all other parts.

SHANGHAI SINOLIFT MECHANICAL AND ELECTRICAL EQUIPMENT CO.,LTD

ADDRESS: No. 2471 Dachuan Road, Nanhui Industry Park, Pudong New District, Shanghai, 201399,P.R.China
Tel: 0086-21-68014500 or 0086-21-58003681
Fax: 0086-21-68014262
Website: www.sinolift.com www.sinoliftchina.com
Skype: sinolift
Whatsapp & Mobile: 0086 138 1757 2420

The BFW scale pallet truck is a simple, economical and robust tool to be used for lifting and weighing of transported loads. Thanks to the 4 load cells it is able to be very precise and functional in all internal weighing operations; ideal for checking incoming goods, avoiding overloads and determining shipping weights.

Built in printer for printing weight data on site is available on request.

A stainless steel option for corrosive or wet environments.

lithium battery

max KG 3000

Ergonomic Handle

Designed for best maneuverability & made of M.S. Pipe
Finger formed grip made of high quality rubber, features a light and smooth lever with a three positions: Lift-Driving-Lowering.

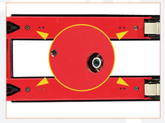

High Accuracy

Maximum error 0.05% of four sensors with ultra-high consistency.
Even if a load is placed out of centre or the floor conditions that are not optimal, the accuracy remains high.

Multiple Function Keys

There are many function keys (including tare and gross weight), which can meet various weighing needs of customers. When pressing the function keys, the operator senses a “click” movement. Even when working with gloves, the operator feels whether he has pressed the key properly.

Built-in Rechargeable Battery

Built-in 5000mAH super-capacity rechargeable battery with the advantages of durability and convenient charging, without disassembly. It lasts 3 months on a single battery charge. and the operating current is only 1ma (on the premise that backlight and printer connection are turned off).

High Quality Wheels

Nylon wheels: it is durable and more labor-saving which is suitable for uneven ground
Polyurethane wheels: it is silent and will not hurt the floor, which is suitable for large capacity weighing and leveling ground.

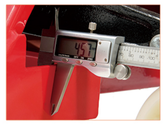

Sturdy from Top to Bottom

Maximum stability is achieved through the well proven fork construction. Electronics and display are protected against dust and water (protection class IP 65).

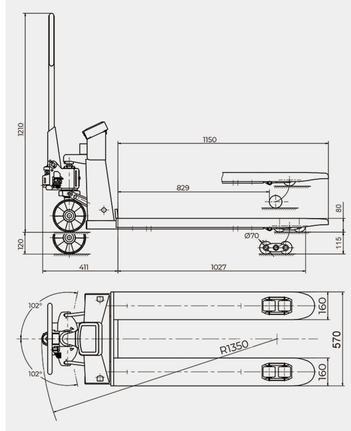

Ingress Protection Standard System IP65; Indicator IP67
Automatic Switch-off Standard After 15 minutes
Graduation 500-2200kg: 1kg
200-500kg: 0.5kg
0-200kg: 0.2kg
Maximum Inaccuracy ±1% Applied Weight

Model		BFW20	BFW20P	BFW20S	BFW25	BFW25P	BFW25S	BFW30
Pump		AC casting	AC casting	AC stainless	AC casting	AC casting	AC stainless	AC casting
With/Without Printer		Without Printer	With Printer	Without Printer	Without Printer	With Printer	Without Printer	Without Printer
Capacity	kg	2000	2000	2000	2500	2500	2500	3000
Fork height	mm	80-195	80-195	80-195	80-195	80-195	80-195	80-195
Steering wheel	mm	φ180x50	φ180x50	φ180x50	φ180x50	φ180x50	φ180x50	φ180x50
Single load roller	mm	φ74x93	φ74x93	φ74x93	φ74x93	φ74x93	φ74x93	φ74x93
Tandem load roller	mm	φ74x70	φ74x70	φ74x70	φ74x70	φ74x70	φ74x70	φ74x70
Size of fork	mm	160x60	160x60	160x60	160x60	160x60	160x60	160x60
Width over forks	mm	570/690	570/690	570/690	570/690	570/690	570/690	570/690
Fork length	mm	1150/1200	1150/1200	1150/1200	1150/1200	1150/1200	1150/1200	1150/1200
Battery		DC 6V/4.5Ah	DC 6V/4.5Ah	DC 6V/4.5Ah	DC 6V/4.5Ah	DC 6V/4.5Ah	DC 6V/4.5Ah	DC 6V/4.5Ah
Charger		100V-240V	100V-240V	100V-240V	100V-240V	100V-240V	100V-240V	100V-240V
Paper for printer (thermal paper)	mm	//	57X50	//	//	57X50	//	//
N.W	kg	106/108	110/112	106/108	122/124	126/130	122/124	128/130
Packing		2pcs/pallet	2pcs/pallet	2pcs/pallet	2pcs/pallet	2pcs/pallet	2pcs/pallet	2pcs/pallet
Packing size	mm	2300X700X760	2300X700X760	2300X700X760	2300X700X760	2300X700X760	2300X700X760	2300X700X760
		2300X800X760	2300X800X760	2300X800X760	2300X800X760	2300X800X760	2300X800X760	2300X800X760

• Built in printer for printing weight data on site is available on request.

BFW20S BFW25S stainless steel Pallet Jack

A stainless steel option for corrosive or wet environments.
These can also be combined for a painted steel body with stainless steel fork shoes.